CSR µEnergy® CSR1010D QFN

Bluetooth Smart IC for Lighting

Production Information

CSR1010A05-DQQM-R

Issue 3

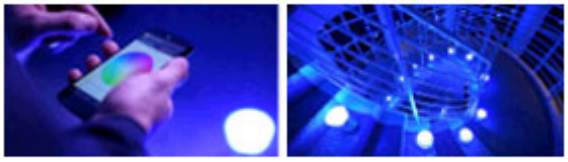

Features

- Bluetooth® v4.1 specification compliant
- Bluetooth Smart
- 128KB memory: 64KB RAM and 64KB ROM
- Support for Bluetooth v4.1 specification host stack including ATT, GATT, SMP, L2CAP, GAP
- RSSI monitoring for proximity applications
- <900nA current consumption in dormant mode
- 15,000 hours of continuous lifetime reliability tested
- Qualified up to 105°C
- 32kHz and 16MHz crystal or system clock
- Switch-mode power supply
- Programmable general purpose PIO controller
- 10-bit ADC
- 12 digital PIOs
- 3 analogue AIOs
- UART
- I²C / SPI for EEPROM / flash memory ICs and peripherals
- Debug SPI
- 4 PWM modules
- Wake-up interrupt and watchdog timer
- QFN 32-lead, 5 x 5 x 0.6mm, 0.5mm pitch

General Description

CSR1010D QFN is a CSR µEnergy platform device. CSR µEnergy are CSR's single-mode Bluetooth low energy products for the Bluetooth Smart market. CSR1010D QFN increases application code and data space for greater application development flexibility.

CSR µEnergy enables ultra low-power connectivity and basic data transfer for applications previously limited by the power consumption, size constraints and complexity of other wireless standards. CSR1010D QFN provides everything required to create a Bluetooth low energy product with RF, baseband, MCU, qualified Bluetooth v4.1 specification stack and customer application running on a single IC.

CSR is the industry leader for Bluetooth low energy, also known as Bluetooth Smart. Bluetooth Smart enables connectivity and data transfer to leading smartphone, tablet and personal computing devices including Apple iPhone, iPad, iPod and Mac products and leading Android devices.

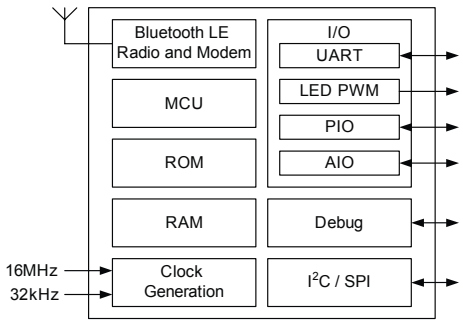

Applications

- Building a smart lighting ecosystem using Bluetooth low energy and CSRmesh™

Bluetooth low energy takes less time to make a connection than conventional Bluetooth wireless technology and can consume approximately 1/20th of the power of Bluetooth Basic Rate.

CSRmesh places the smartphone at the centre of the Internet of Things allowing an almost unlimited number of Bluetooth Smart enabled devices to be simply networked together and controlled directly from a single smartphone, tablet or PC.

CSR1010D QFN supports CSRmesh and standard Bluetooth Smart applications including:

- CSRmesh:
  - Internet of Things control
  - Smart home: lighting, heating, appliance and security control
- Bluetooth Smart:
  - HID: keyboards, mice, touchpads, remote controls
  - Sports and fitness sensors: heart rate, runner speed and cadence, cycle speed and cadence
  - Health sensors: blood pressure, thermometer and glucose meters
  - Mobile accessories: watches, proximity tags, alert tags and camera controls
  - Smart home: lighting, heating, appliances and security

© Cambridge Silicon Radio Limited 2014-2015
Confidential Information - This Material is Subject to CSR's Non-Disclosure Agreement

Ordering Information

Device	Package			Order Number
	Type	Size	Shipment Method	
CSR1010D QFN	QFN-32-lead (Pb free)	5 x 5 x 0.6mm 0.5mm pitch	Tape and reel	CSR1010A05-DQQM-R

Note:

Minimum order quantity is 4kpcs taped and reeled.

Supply chain: CSR's manufacturing policy is to multisource volume products. For further details, contact your local sales account manager or representative.

CSR1010D QFN Development Kit Ordering Information

Description	Order Number
CSR1010D QFN Development Kit example design for software development only	DK-CSR1010-10136-1A
CSRmesh™ Development Kit for lighting applications	DK-CSR1010-10184-1A

Contacts

General information	www.csr.com
Information on this product	sales@csr.com
Customer support for this product	www.csrsupport.com
Details of compliance and standards	product.compliance@csr.com
Help with this document	comments@csr.com

Chip Marking

Figure shows the CSR1010D QFN chip markings.

Note:

Marking method is laser and all markings are centre-justified.

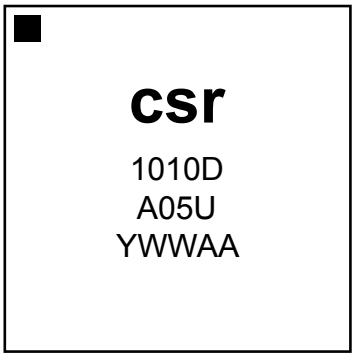

G-TW-0013689.1.2

Figure : Chip Marking

© Cambridge Silicon Radio Limited 2014-2015
Confidential Information - This Material is Subject to CSR's Non-Disclosure Agreement

- Location dot: Identifying pin 1
- 1st row: CSR logo or text
- 2nd and 3rd row: Device type
  - 1010D = 1010 (4-digit part number) + D (defined temperature range)
  - A05U = A05 (die revision) + U (green and Pb-free)
- 4th row: Trace code
  - YWWAA = Y (assembly year's last digit) + WW (assembly week) + AA (lot number)

© Cambridge Silicon Radio Limited 2014-2015

Confidential Information - This Material is Subject to CSR's Non-Disclosure Agreement

Device Details

Bluetooth Radio

- On-chip balun (50Ω impedance in TX and RX modes)
- No external trimming is required in production
- Bluetooth v4.1 specification compliant

Bluetooth Transmitter

- 9dBm RF transmit power with level control from integrated 6-bit DAC over a dynamic range >25dB
- No external power amplifier or TX/RX switch required

Bluetooth Receiver

- -93dBm sensitivity
- Integrated channel filters
- Digital demodulator for improved sensitivity and co-channel rejection
- Fast AGC for enhanced dynamic range

Bluetooth Stack

CSR's protocol stack runs on the integrated MCU:

- Support for Bluetooth v4.1 specification features:
  - Master and slave operation
  - Including encryption
- Software stack in firmware includes:
  - GAP
  - L2CAP
  - Security manager
  - Attribute protocol
  - Attribute profile
  - Bluetooth low energy profile support

Synthesiser

- Fully integrated synthesiser requires no external VCO varactor diode, resonator or loop filter

Baseband and Software

- Hardware MAC for all packet types enables packet handling without the need to involve the MCU

Physical Interfaces

- SPI master interface
- SPI programming and debug interface
- I²C
- 12 digital PIOs
- 3 analogue AIOs
- UART

Auxiliary Features

- Battery monitor
- Power management features include software shutdown and hardware wake-up
- CSR1010D QFN can run in low power modes from an external 32.768kHz clock signal
- Integrated switch-mode power supply
- Linear regulator (internal use only)
- Power-on-reset cell detects low supply voltage

Package

- 32-lead 5 x 5 x 0.6mm, 0.5mm pitch QFN

© Cambridge Silicon Radio Limited 2014-2015
Confidential Information - This Material is Subject to CSR's Non-Disclosure Agreement

G-TW-0005362.9.2

CSR

Functional Block Diagram

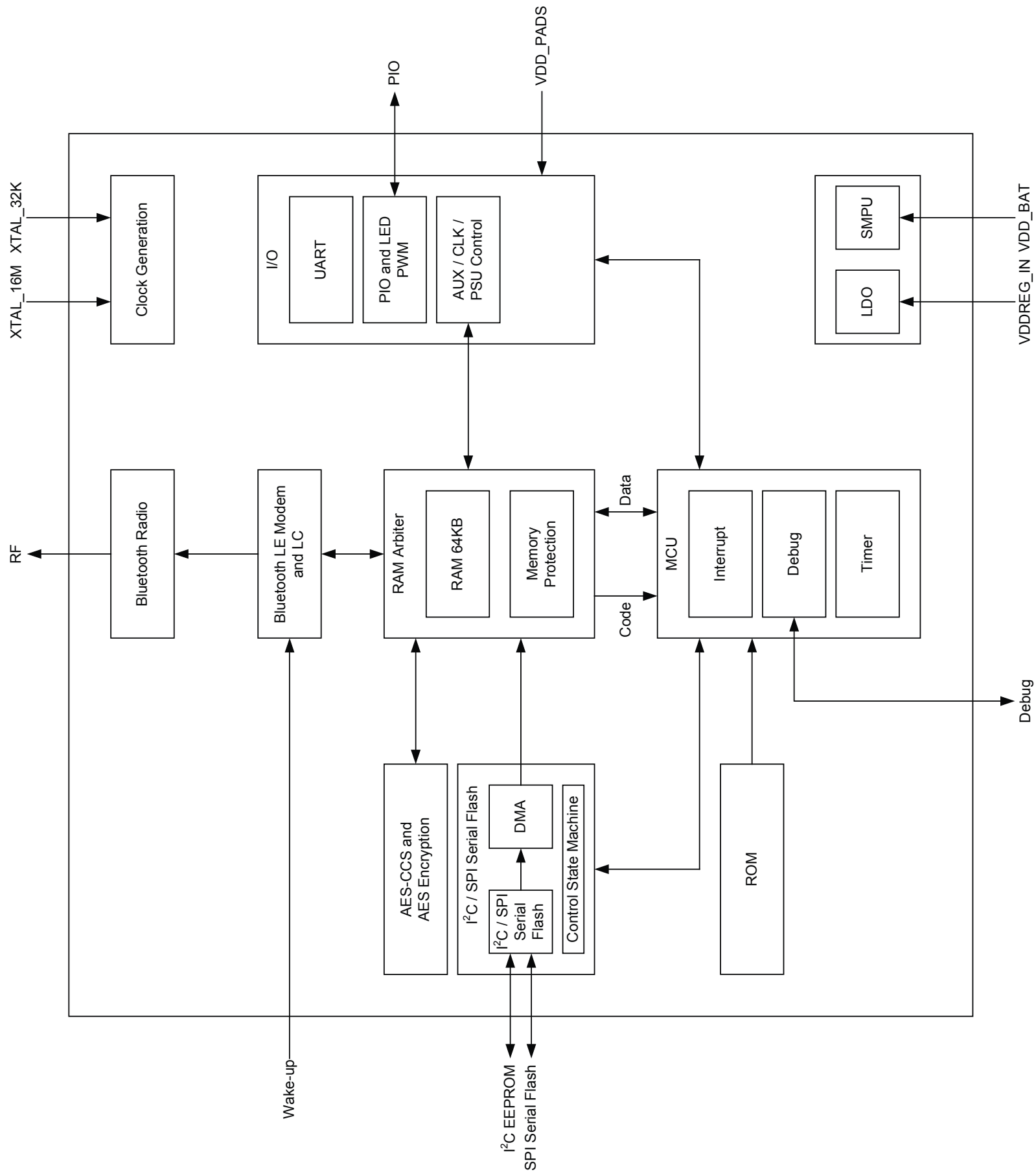

Production Information
© Cambridge Silicon Radio Limited 2014-2015
Confidential Information - This Material is Subject to CSR's Non-Disclosure Agreement

Document History

Revision	Date	Change Reason
1	07 JUL 14	Original publication of this document.
2	10 OCT 14	Updated Product Reliability information.
3	06 JAN 15	Updates include: ▪ Section 3 Clock Generation ▪ Section 4 Operating Modes. ▪ Section 5 Microcontroller, Memory and Baseband Logic. ▪ Section 6 Serial Interfaces. ▪ Section 7 Power Control and Regulation. ▪ Section 8 Example Application Schematic. ▪ Section 9 Electrical Characteristics. ▪ Section 10 Current Consumption. ▪ Other minor updates.

© Cambridge Silicon Radio Limited 2014-2015
Confidential Information - This Material is Subject to CSR's Non-Disclosure Agreement

Status Information

The status of this Data Sheet is **Production Information**. CSR Product Data Sheets progress according to the following format:

- **Advance Information:**
  - Information for designers concerning CSR product in development. All values specified are the target values of the design. Minimum and maximum values specified are only given as guidance to the final specification limits and must not be considered as the final values.
- **Engineering Sample:**
  - Information about initial devices. Devices are untested or partially tested prototypes, their status is described in an Engineering Sample Release Note. All values specified are the target values of the design. Minimum and maximum values specified are only given as guidance to the final specification limits and must not be considered as the final values.
  - All detailed specifications including pinouts and electrical specifications may be changed by CSR without notice.
- **Pre-production Information:**
  - Pinout and mechanical dimension specifications finalised. All values specified are the target values of the design. Minimum and maximum values specified are only given as guidance to the final specification limits and must not be considered as the final values.
  - All electrical specifications may be changed by CSR without notice.
- **Production Information:**
  - Final Data Sheet including the guaranteed minimum and maximum limits for the electrical specifications.
  - Production Data Sheets supersede all previous document versions.

Device Implementation

Important Note:

As the feature-set of the CSR1010D QFN is firmware build-specific, see the relevant software release note for the exact implementation of features on the CSR1010D QFN.

Life Support Policy and Use in Safety-critical Applications

CSR's products are not authorised for use in life-support or safety-critical applications. Use in such applications is done at the sole discretion of the customer. CSR will not warrant the use of its devices in such applications.

CSR Green Semiconductor Products and RoHS Compliance

CSR1010D QFN devices meet the requirements of Directive 2011/65/EU of the European Parliament and of the Council on the Restriction of Hazardous Substance (RoHS). CSR1010D QFN devices are free from halogenated or antimony trioxide-based flame retardants and other hazardous chemicals. For more information, see CSR's *Environmental Compliance Statement for CSR Green Semiconductor Products*.

Trademarks, Patents and Licences

Unless otherwise stated, words and logos marked with ™ or ® are trademarks registered or owned by CSR plc or its affiliates. Bluetooth ® and the Bluetooth ® logos are trademarks owned by Bluetooth ® SIG, Inc. and licensed to CSR. Other products, services and names used in this document may have been trademarked by their respective owners.

The publication of this information does not imply that any license is granted under any patent or other rights owned by CSR plc and/or its affiliates.

CSR reserves the right to make technical changes to its products as part of its development programme.

While every care has been taken to ensure the accuracy of the contents of this document, CSR cannot accept responsibility for any errors.

Refer to www.csrsupport.com for compliance and conformance to standards information.

© Cambridge Silicon Radio Limited 2014-2015
Confidential Information - This Material is Subject to CSR's Non-Disclosure Agreement

Contents

Ordering Information 2
CSR1010D QFN Development Kit Ordering Information 2
Contacts 2
Chip Marking 2
Device Details 4
Functional Block Diagram 5
1 Package Information 11
1.1 Pinout Diagram 11
1.2 Device Terminal Functions 12
1.3 Package Dimensions 15
1.4 PCB Design and Assembly Considerations 16
1.5 Typical Solder Reflow Profile 16
2 Bluetooth Modem 17
2.1 RF Ports 17
2.2 RF Receiver 17
2.2.1 Low Noise Amplifier 17
2.2.2 RSSI Analogue to Digital Converter 17
2.3 RF Transmitter 17
2.3.1 IQ Modulator 17
2.3.2 Power Amplifier 17
2.4 Bluetooth Radio Synthesiser 17
2.5 Baseband 17
2.5.1 Physical Layer Hardware Engine 17
3 Clock Generation 18
3.1 Clock Architecture 18
3.2 Crystal Oscillator: XTAL_16M_IN and XTAL_16M_OUT 18
3.2.1 Crystal Specification 18
3.2.2 Frequency Trim 19
3.3 Sleep Clock 19
3.3.1 Crystal Specification 19
4 Operating Modes 21
4.1 Run Mode 21
4.2 Idle Mode 21
4.3 Deep Sleep Mode 21
4.4 Hibernate Mode 21
4.5 Dormant Mode 21
5 Microcontroller, Memory and Baseband Logic 22
5.1 System RAM 22
5.2 Internal ROM 22
5.3 Microcontroller 22
5.4 Programmable I/O Ports, PIO and AIO 22
5.5 LED Flasher / PWM Module 23
5.6 Temperature Sensor 24
5.7 Battery Monitor 25
6 Serial Interfaces 26
6.1 Application Interface 26
6.1.1 UART Interface 26
6.2 I²C Interface 26
6.3 SPI Master Interface 28

© Cambridge Silicon Radio Limited 2014-2015
Confidential Information - This Material is Subject to CSR's Non-Disclosure Agreement

6.4 Programming and Debug Interface ... 30
6.4.1 Instruction Cycle ... 30
6.4.2 Multi-slave Operation ... 31
7 Power Control and Regulation ... 32
7.1 Switch-mode Regulator ... 32
7.2 Low-voltage VDD_CORE Linear Regulator ... 32
7.3 Reset ... 32
7.3.1 Digital Pin States on Reset ... 32
7.3.2 Power-on Reset ... 33
8 Example Application Schematic ... 34
9 Electrical Characteristics ... 35
9.1 Absolute Maximum Ratings ... 35
9.2 Recommended Operating Conditions ... 35
9.3 Input/Output Terminal Characteristics ... 36
9.3.1 Switch-mode Regulator ... 36
9.3.2 Low-voltage Linear Regulator ... 36
9.3.3 Digital Terminals ... 36
9.3.4 AIO ... 37
9.4 Junction Temperature ... 39
9.5 ESD Protection ... 39
10 Current Consumption ... 40
11 Product Reliability Tests ... 41
11.1 Die Test ... 41
12 CSR Green Semiconductor Products and RoHS Compliance ... 42
13 CSR1010D QFN Software Stack ... 43
14 Tape and Reel Information ... 44
14.1 Tape Orientation ... 44
14.2 Tape Dimensions ... 45
14.3 Reel Information ... 46
14.4 Moisture Sensitivity Level ... 46
15 Document References ... 47
Terms and Definitions ... 48

List of Figures

Figure 1.1 Pinout Diagram ... 11
Figure 3.1 Clock Architecture ... 18
Figure 3.2 Crystal Driver Circuit ... 18
Figure 3.3 Sleep Clock Crystal Driver Circuit ... 19
Figure 5.1 Baseband Digits Block Diagram ... 22
Figure 5.2 Typical PWM Signal on a PIO ... 24
Figure 6.1 Example of an I²C Interface EEPROM Connection ... 27
Figure 6.2 I²C Standard Mode 100 kHz Timing Diagram (Top Line: SCL, Bottom Line: SDA) ... 27
Figure 6.3 I²C Fast Mode 400 kHz Timing Diagram (Top Line: SCL, Bottom Line: SDA) ... 28
Figure 6.4 SPI Timing Diagram ... 29
Figure 6.5 Memory Boot-up Sequence ... 30
Figure 7.1 Voltage Regulator Configuration ... 32
Figure 13.1 Software Architecture ... 43
Figure 14.1 Tape Orientation ... 44
Figure 14.2 Tape Dimensions ... 45
Figure 14.3 Reel Dimensions ... 46

© Cambridge Silicon Radio Limited 2014-2015
Confidential Information - This Material is Subject to CSR's Non-Disclosure Agreement

List of Tables

Table 3.1 Crystal Specification 19
Table 3.2 Sleep Clock Specification 20
Table 5.1 Wake Options for Sleep Modes 23
Table 5.2 Alternative PIO Functions 23
Table 5.3 PWM Operating Range 24
Table 6.1 Possible UART Settings 26
Table 6.2 I²C Standard Mode 100 kHz Timing Definition 27
Table 6.3 I²C Fast Mode 400 kHz Timing Definition 28
Table 6.4 SPI Master Serial Flash Memory Interface 29
Table 6.5 Instruction Cycle for a SPI Transaction 31
Table 7.1 Pin States on Reset 33
Table 7.2 Power-on Reset 33
Table 9.1 Junction Temperature within Recommended Operating Conditions 39
Table 9.2 ESD Handling Ratings 39
Table 10.1 Current Consumption 40

© Cambridge Silicon Radio Limited 2014-2015
Confidential Information - This Material is Subject to CSR's Non-Disclosure Agreement

1 Package Information

1.1 Pinout Diagram

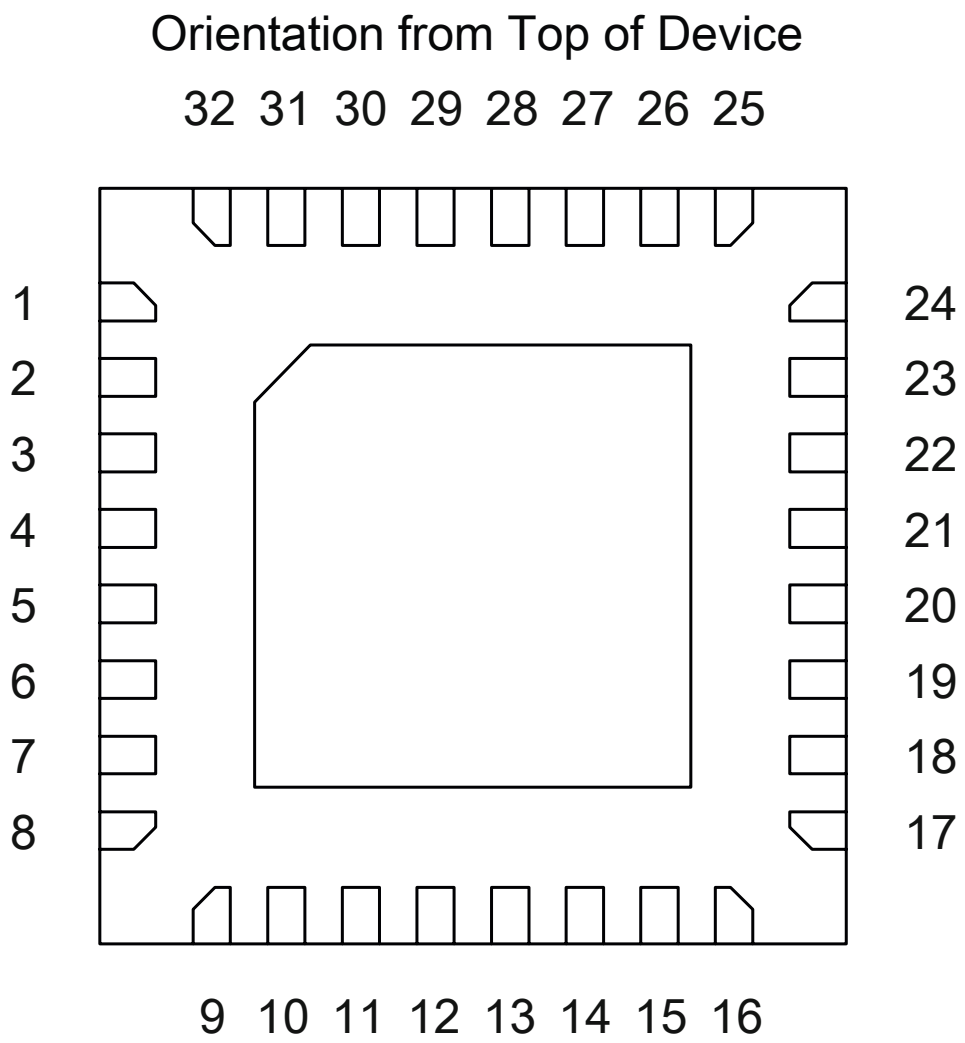

G-TW-0005350.6.1

Figure 1.1: Pinout Diagram

© Cambridge Silicon Radio Limited 2014-2015
Confidential Information - This Material is Subject to CSR's Non-Disclosure Agreement

1.2 Device Terminal Functions

Radio	Lead	Pad Type	Supply Domain	Description
RF	7	RF	VDD_RADIO[(a)]	Bluetooth transmitter / receiver.

[(a)] The VDD_RADIO domain is generated from VDD_REG_IN, see Figure 7.1.

Synthesiser and Oscillator	Lead	Pad Type	Supply Domain	Description
XTAL_32K_OUT	2	Analogue	VDD_BAT	Drive for sleep clock crystal.
XTAL_32K_IN	3	Analogue	VDD_BAT	32.768kHz sleep clock input.
XTAL_16M_OUT	9	Analogue	VDD_ANA[(b)]	Drive for crystal.
XTAL_16M_IN	10	Analogue	VDD_ANA	Reference clock input.

[(b)] The VDD_ANA domain is generated from VDD_REG_IN, see Figure 7.1.

I²C Interface	Lead	Pad Type	Supply Domain	Description
I2C_SDA	29	Bidirectional, tristate, with weak internal pull-up	VDD_PADS	I²C data input / output or SPI serial flash data output (SF_DOUT). If connecting to SPI serial flash, connect this pin to SO on the serial flash. See Section 6.3.
I2C_SCL	28	Input with weak internal pull-up	VDD_PADS	I²C clock or SPI serial flash clock output (SF_CLK), see Section 6.3.

PIO Port	Lead	Pad Type	Supply Domain	Description
PIO[11]	25	Bidirectional with programmable strength internal pull-up/down	VDD_PADS	Programmable I/O line.
PIO[10]	24			
PIO[9]	23			
PIO[8] / DEBUG_MISO	22	Bidirectional with programmable strength internal pull-up/down	VDD_PADS	Programmable I/O line or debug SPI MISO selected by SPI_PIO#.
PIO[7] / DEBUG_MOSI	20			Programmable I/O line or debug SPI MOSI selected by SPI_PIO#.
PIO[6] / DEBUG_CS#	19			Programmable I/O line or debug SPI chip select (CS#) selected by SPI_PIO#.
PIO[5] / DEBUG_CLK	18			Programmable I/O line or debug SPI CLK selected by SPI_PIO#.

© Cambridge Silicon Radio Limited 2014-2015
Confidential Information - This Material is Subject to CSR's Non-Disclosure Agreement

PIO Port	Lead	Pad Type	Supply Domain	Description
PIO[4] / SF_CS#	17	Bidirectional with programmable strength internal pull-up/down	VDD_PADS	Programmable I/O line or SPI serial flash chip select (SF_CS#), see Section 6.3.
PIO[3] / SF_DIN	16			Programmable I/O line or SPI serial flash data (SF_DIN) input. If connecting to SPI serial flash, this pin connects to SI on the serial flash. See Section 6.3.
PIO[2]	27	Bidirectional with programmable strength internal pull-up/down	VDD_PADS	Programmable I/O line or I²C power.
PIO[1] / UART_RX	15	Bidirectional with programmable strength internal pull-up/down	VDD_PADS	Programmable I/O line or UART RX.
PIO[0] / UART_TX	14			Programmable I/O line or UART TX.
AIO[2]	11	Bidirectional analogue	VDD_AUX[c]	Analogue programmable I/O line.
AIO[1]	12			
AIO[0]	13			

[c] The VDD_AUX domain is generated from VDD_REG_IN, see Figure 7.1.

Test and Debug	Lead	Pad Type	Supply Domain	Description
SPI_PIO#	26	Input with strong internal pull-down	VDD_PADS	Selects SPI debug on PIO[8:5].

Wake-up	Lead	Pad Type	Supply Domain	Description
WAKE	4	Input has no internal pull-up or pull-down, use external pull-down.	VDD_BAT	Input to wake CSR1010D QFN from hibernate or dormant.

© Cambridge Silicon Radio Limited 2014-2015
Confidential Information - This Material is Subject to CSR's Non-Disclosure Agreement

Power Supplies and Control	Lead	Description
VDD_BAT	1	Battery input and regulator enable (active high).
VDD_BAT_SMPS	32	Input to high-voltage switch-mode regulator.
SMPS_LX	31	High-voltage switch-mode regulator output.
VDD_CORE	5, 30	Positive supply for digital domain.
VDD_PADS	21	Positive supply for all digital I/O ports PIO[11:0].
VDD_REG_IN	6	Positive supply for Bluetooth radio and digital linear regulator.
VDD_XTAL	8	Decouple with 470nF capacitor to ground.
VSS	Exposed pad	Ground connections.

© Cambridge Silicon Radio Limited 2014-2015
Confidential Information - This Material is Subject to CSR's Non-Disclosure Agreement

1.3 Package Dimensions

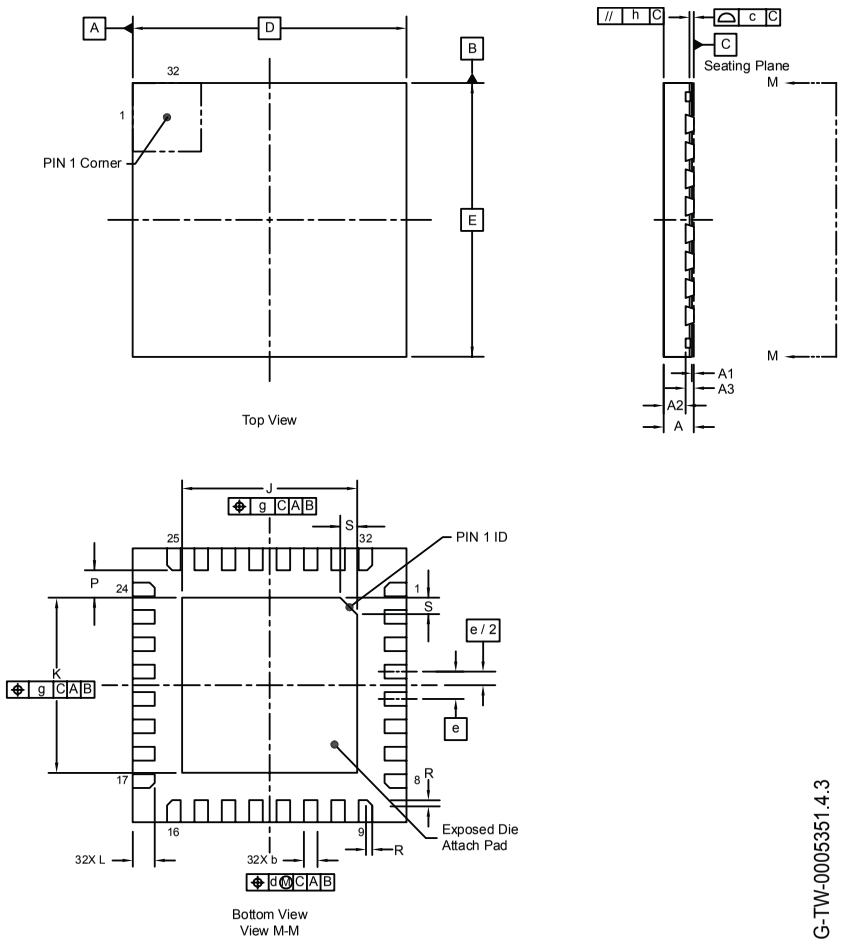

Dimension	Min	Typ	Max	Dimension	Min	Typ	Max
A	0.50	0.55	0.60	e	-	0.5	-
A1	0	0.035	0.05	g	-	0.1	-
A2	-	0.4	0.425	h	-	0.1	-
A3	-	0.152	-	J	3.1	3.2	3.3
b	0.20	0.25	0.30	K	3.1	3.2	3.3
c	-	0.08	-	L	0.35	0.40	0.45
D	4.9	5.0	5.1	P	0.3	-	-
d	-	0.10	-	R	-	0.093	-
E	4.9	5.0	5.1	S	-	0.3	-

Notes	1. Coplanarity applies to leads, corner leads and die attach pad.		
Description	32-lead Quad-flat No-lead Package		
Size	5 x 5 x 0.6mm	**JEDEC**	MO-220
Pitch	0.5	**Units**	mm

© Cambridge Silicon Radio Limited 2014-2015
Confidential Information - This Material is Subject to CSR's Non-Disclosure Agreement

1.4 PCB Design and Assembly Considerations

This section lists recommendations to achieve maximum board-level reliability of the 5 x 5 x 0.6mm QFN 32-lead package:

- NSMD lands (lands smaller than the solder mask aperture) are preferred, because of the greater accuracy of the metal definition process compared to the solder mask process. With solder mask defined pads, the overlap of the solder mask on the land creates a step in the solder at the land interface, which can cause stress concentration and act as a point for crack initiation.
- CSR recommends that the PCB land pattern is in accordance with IPC standard IPC-7351.
- Solder paste must be used during the assembly process.

1.5 Typical Solder Reflow Profile

For information, see *Typical Solder Reflow Profile for Lead-free Devices Information Note*.

© Cambridge Silicon Radio Limited 2014-2015
Confidential Information - This Material is Subject to CSR's Non-Disclosure Agreement

2 Bluetooth Modem

2.1 RF Ports

CSR1010D QFN contains an integrated balun which provides a single-ended RF TX / RX port pin. No matching components are needed as the receive mode impedance is 50Ω and the transmitter has been optimised to deliver power in to a 50Ω load.

2.2 RF Receiver

The receiver features a near-zero IF architecture that allows the channel filters to be integrated onto the die. Sufficient out-of-band blocking specification at the LNA input allows the receiver to be used in close proximity to GSM and W-CDMA cellular phone transmitters without being significantly desensitised.

An ADC digitises the IF received signal.

2.2.1 Low Noise Amplifier

The LNA operates in differential mode and takes its input from the balanced port of the integrated balun.

2.2.2 RSSI Analogue to Digital Converter

The ADC samples the RSSI voltage on a packet-by-packet basis and implements a fast AGC. The front-end LNA gain is changed according to the measured RSSI value, keeping the first mixer input signal within a limited range. This improves the dynamic range of the receiver, improving performance in interference-limited environments.

2.3 RF Transmitter

2.3.1 IQ Modulator

The transmitter features a direct IQ modulator to minimise frequency drift during a transmit packet, which results in a controlled modulation index. Digital baseband transmit circuitry provides the required spectral shaping.

2.3.2 Power Amplifier

The internal PA has a maximum 9dBm output power without needing an external RF PA.

2.4 Bluetooth Radio Synthesiser

The Bluetooth radio synthesiser is fully integrated onto the die with no requirement for an external VCO screening can, varactor tuning diodes, LC resonators or loop filter. The synthesiser is guaranteed to lock in sufficient time across the guaranteed temperature range to meet the Bluetooth v4.1 specification.

2.5 Baseband

2.5.1 Physical Layer Hardware Engine

Dedicated logic performs:

- Cyclic redundancy check
- Encryption
- Data whitening
- Access code correlation

The hardware supports all optional and mandatory features of Bluetooth v4.1 specification.

© Cambridge Silicon Radio Limited 2014-2015
Confidential Information - This Material is Subject to CSR's Non-Disclosure Agreement

3 Clock Generation

The Bluetooth reference clock for the system is generated from an external 16MHz clock source, see Figure 3.1. All the CSR1010D QFN internal digital clocks are generated using a phase locked loop, which is locked to the frequency of either the external reference clock source or a sleep clock frequency of 32.768kHz, see Figure 3.1.

3.1 Clock Architecture

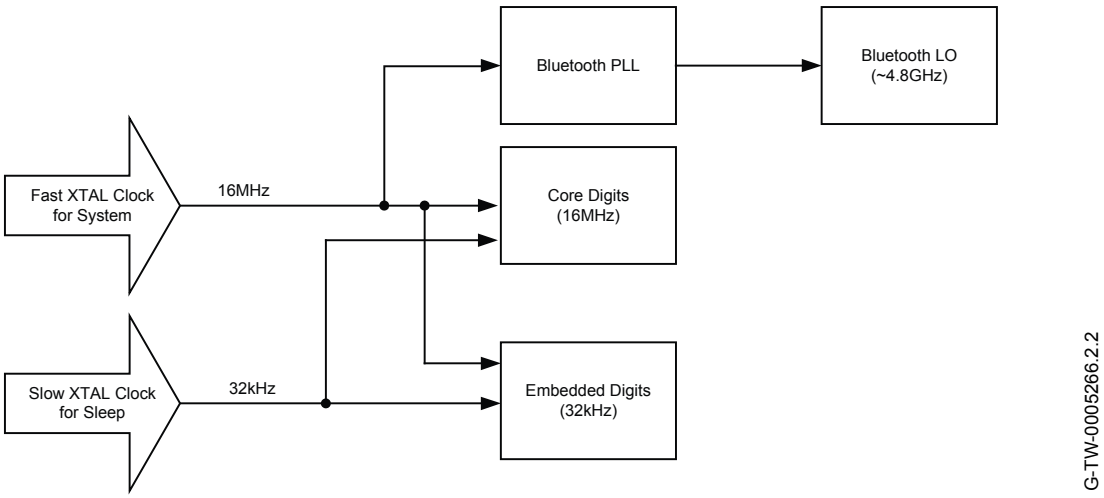

Figure 3.1: Clock Architecture

3.2 Crystal Oscillator: XTAL_16M_IN and XTAL_16M_OUT

CSR1010D QFN contains crystal driver circuits. This operates with an external crystal and capacitors to form a Pierce oscillator. Figure 3.2 shows the external crystal is connected to pins XTAL_16M_IN and XTAL_16M_OUT.

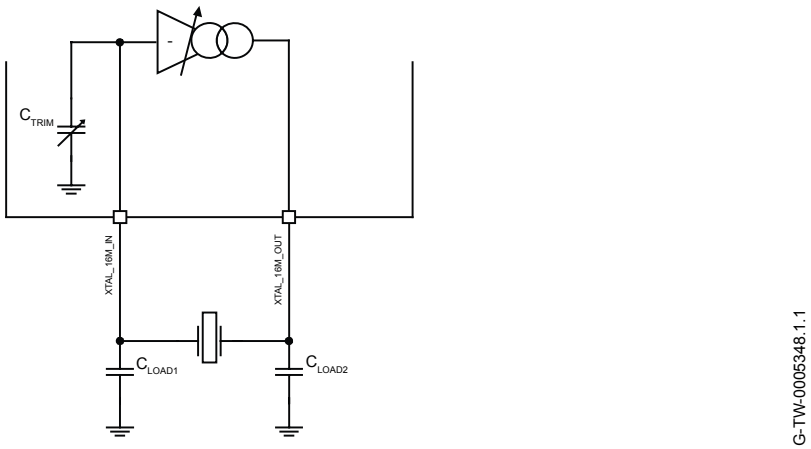

Figure 3.2: Crystal Driver Circuit

Note:

C_{TRIM} is the internal trimmable capacitance in Table 3.1.

C_{LOAD1} and C_{LOAD2} in combination with C_{TRIM} and any parasitic capacitance provide the load capacitance required by the crystal.

3.2.1 Crystal Specification

Table 3.1 shows the specification for an external crystal.

© Cambridge Silicon Radio Limited 2014-2015
Confidential Information - This Material is Subject to CSR's Non-Disclosure Agreement

Parameter	Min	Typ	Max	Unit
Frequency	-	16	-	MHz
Frequency tolerance (without trimming)[a]	-	-	±25	ppm
Frequency trim range[b]	-	±50	-	ppm
Drive level	-	0.4	-	V
Equivalent series resistance	-	-	60	Ω
Load capacitance	-	9	-	pF
Pullability	10	-	-	ppm/pF

Table 3.1: Crystal Specification

[a] Use integrated load capacitors to trim initial frequency tolerance in production or to trim frequency over temperature, increasing the allowable frequency tolerance.

[b] Frequency trim range is dependent on crystal load capacitor values and crystal pullability.

3.2.2 Frequency Trim

CSR1010D QFN contains variable integrated capacitors to allow for fine-tuning of the crystal resonant frequency. This firmware-programmable feature allows accurate trimming of crystals on a per-device basis on the production line. The resulting trim value is stored in non-volatile memory.

3.3 Sleep Clock

The sleep clock is an externally provided 32.768kHz clock that is used during deep sleep and in other low-power modes. Figure 3.3 shows the sleep clock crystal driver circuit.

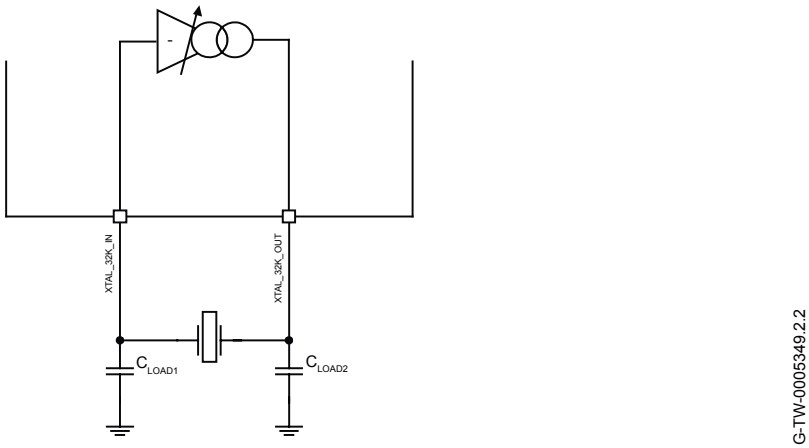

Figure 3.3: Sleep Clock Crystal Driver Circuit

Note:

C_{LOAD1} and C_{LOAD2} in combination with any parasitic capacitance provide the load capacitance required by the crystal.

3.3.1 Crystal Specification

Table 3.2 shows the requirements for the sleep clock.

© Cambridge Silicon Radio Limited 2014-2015
Confidential Information - This Material is Subject to CSR's Non-Disclosure Agreement

Sleep Clock	Min	Typ	Max	Units
Frequency	30	32.768	35	kHz
Frequency tolerance[(a) (b)]	-	-	250	±ppm
Frequency trim range	-	50	-	±ppm
Drive level	-	0.4	-	V
Load capacitance	-	-	10	pF
Equivalent series resistance	40	-	65	kΩ
Duty cycle	30:70	50:50	70:30	%

Table 3.2: Sleep Clock Specification

[(a)] The frequency of the slow clock is periodically calibrated against the system clock. As a result the rate of change of the frequency is more important than the maximum deviation. To meet the accuracy requirements the frequency should not drift due to temperature or other effects by more than 80ppm in any 5 minute period.

[(b)] CSR1010D QFN can correct for ±1% by using the fast clock to calibrate the slow clock.

© Cambridge Silicon Radio Limited 2014-2015
Confidential Information - This Material is Subject to CSR's Non-Disclosure Agreement

4 Operating Modes

CSR1010D QFN has 5 operating modes. 3 of these are sleep modes:

- Running
- Idle
- Sleep modes:
  - Deep Sleep
  - Hibernate
  - Dormant

For current consumption rates in the operating modes, see Section 10.

4.1 Run Mode

In Run mode, all functions are on. RX and/or TX are active.

4.2 Idle Mode

In Idle mode, the VDD_PADS and VDD_BAT domains are powered, the reference clock and the sleep clock are powered, the RAM is powered and the digital circuits are powered. The MCU is idle.

There is a <1µs wake-up time.

4.3 Deep Sleep Mode

In Deep Sleep mode, the VDD_PADS and VDD_BAT domains are powered, the sleep clock is on but the reference clock is off, the RAM is on, the digital circuits are on and the SMPS is on (low-power mode). There is a configurable wake-up time.

CSR1010D QFN is woken from Deep Sleep mode by any PIO configured to wake the IC.

4.4 Hibernate Mode

In Hibernate mode, the VDD_PADS and VDD_BAT domains are powered and the sleep clock is on. The reference clock is off.

CSR1010D QFN is woken from Hibernate mode by a selected level on the WAKE pin or by the watchdog timer.

4.5 Dormant Mode

In Dormant mode, all functions are off. CSR1010D QFN is woken from Dormant mode by a selected level on the WAKE pin.

© Cambridge Silicon Radio Limited 2014-2015
Confidential Information - This Material is Subject to CSR's Non-Disclosure Agreement

5 Microcontroller, Memory and Baseband Logic

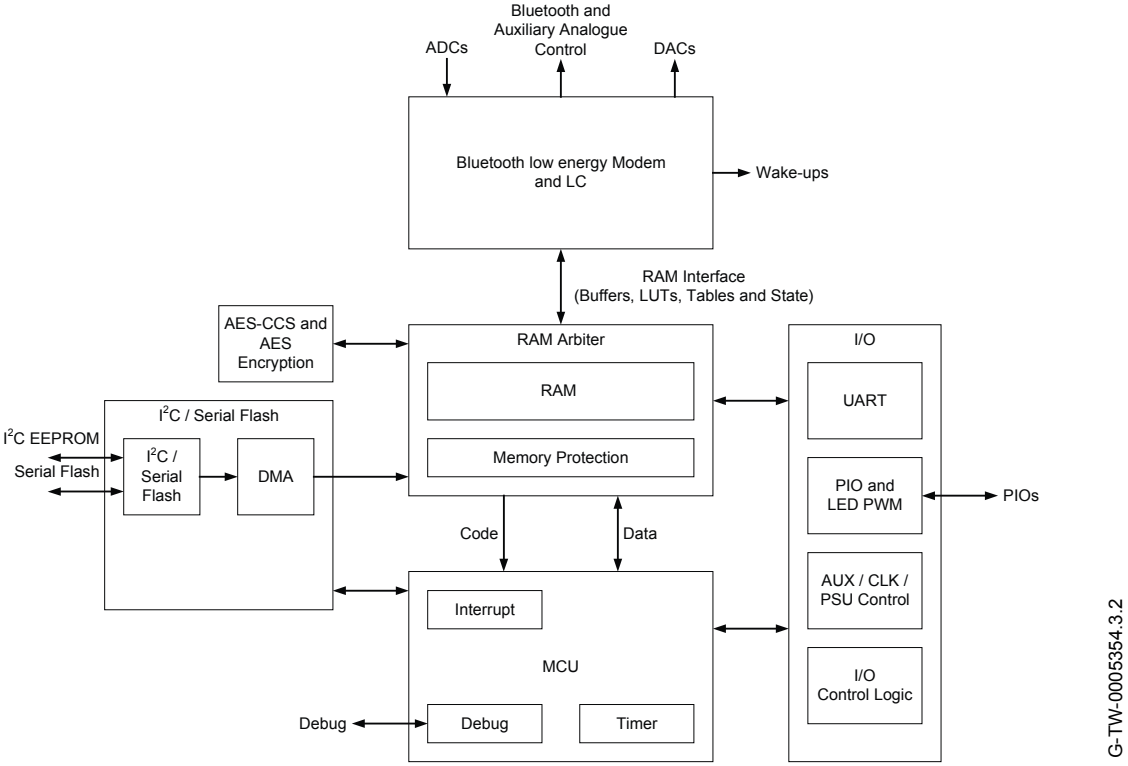

Figure 5.1: Baseband Digits Block Diagram

5.1 System RAM

64KB of integrated RAM supports the RISC MCU and is shared between the ring buffers used to hold data for each active connection, general-purpose memory required by the Bluetooth stack and the user application.

5.2 Internal ROM

CSR1010D QFN has 64KB of internal ROM. This memory is provided for system firmware implementation. If the internal ROM holds valid program code, on boot-up, this is copied into the program RAM. Code then executes from ROM and RAM.

5.3 Microcontroller

The MCU, interrupt controller and event timer run the Bluetooth software stack and control the Bluetooth radio and external interfaces. A 16-bit RISC microcontroller is used for low power consumption and efficient use of memory.

5.4 Programmable I/O Ports, PIO and AIO

12 lines of programmable bidirectional I/O are provided. They are all powered from VDD_PADS.

PIO lines are software-configurable as weak pull-up, weak pull-down, strong pull-up or strong pull-down.

Note:

At reset all PIO lines are inputs with weak pull-downs.

Any of the PIO lines can be configured as interrupt request lines or to wake the IC from deep sleep mode. Table 5.1 lists the options for waking the IC from the sleep modes.

© Cambridge Silicon Radio Limited 2014-2015
Confidential Information - This Material is Subject to CSR's Non-Disclosure Agreement

Sleep Mode	Wake-up Options
Dormant	Can only be woken by the WAKE pin.
Hibernate	Can be woken by the WAKE pin or by the watchdog timer.
Deep Sleep	Can be woken by any PIO configured to wake the IC.

Table 5.1: Wake Options for Sleep Modes

The CSR1010D QFN supports alternative functions on the PIO lines, for example:

- SPI interface, see Section 1.2 and Section 6.4
- UART, see Section 1.2 and Section 6.1.1
- LED flasher / PWM module, see Section 5.5

Table 5.2 shows the alternative functions on the PIO lines.

PIO	Function		
	Debug SPI	SPI Flash	UART
PIO[8]	DEBUG_MISO	-	-
PIO[7]	DEBUG_MOSI	-	-
PIO[6]	DEBUG_CS#	-	-
PIO[5]	DEBUG_CLK	-	-
PIO[4]	-	SF_CS#	-
PIO[3]	-	SF_DIN	-
PIO[2]	-	-	-
PIO[1]	-	-	UART_RX
PIO[0]	-	-	UART_TX

Table 5.2: Alternative PIO Functions

Note:

CSR cannot guarantee that the PIO assignments remain as described. Implementation of the PIO lines is firmware build-specific, for more information see the relevant software release note.

CSR1010D QFN has 3 general-purpose analogue interface pins, AIO[2:0].

5.5 LED Flasher / PWM Module

CSR1010D QFN contains an LED flasher / PWM module.

Note:

The LED flasher functions in Deep Sleep and Active modes only.

The PWM functions in all modes except Hibernate and Dormant.

These functions are controlled by the on-chip firmware.

© Cambridge Silicon Radio Limited 2014-2015
Confidential Information - This Material is Subject to CSR's Non-Disclosure Agreement

Figure 5.2 shows a typical PWM signal on a PIO. For more information, see *CSR µEnergy Pulse Width Modulation Application Note*.

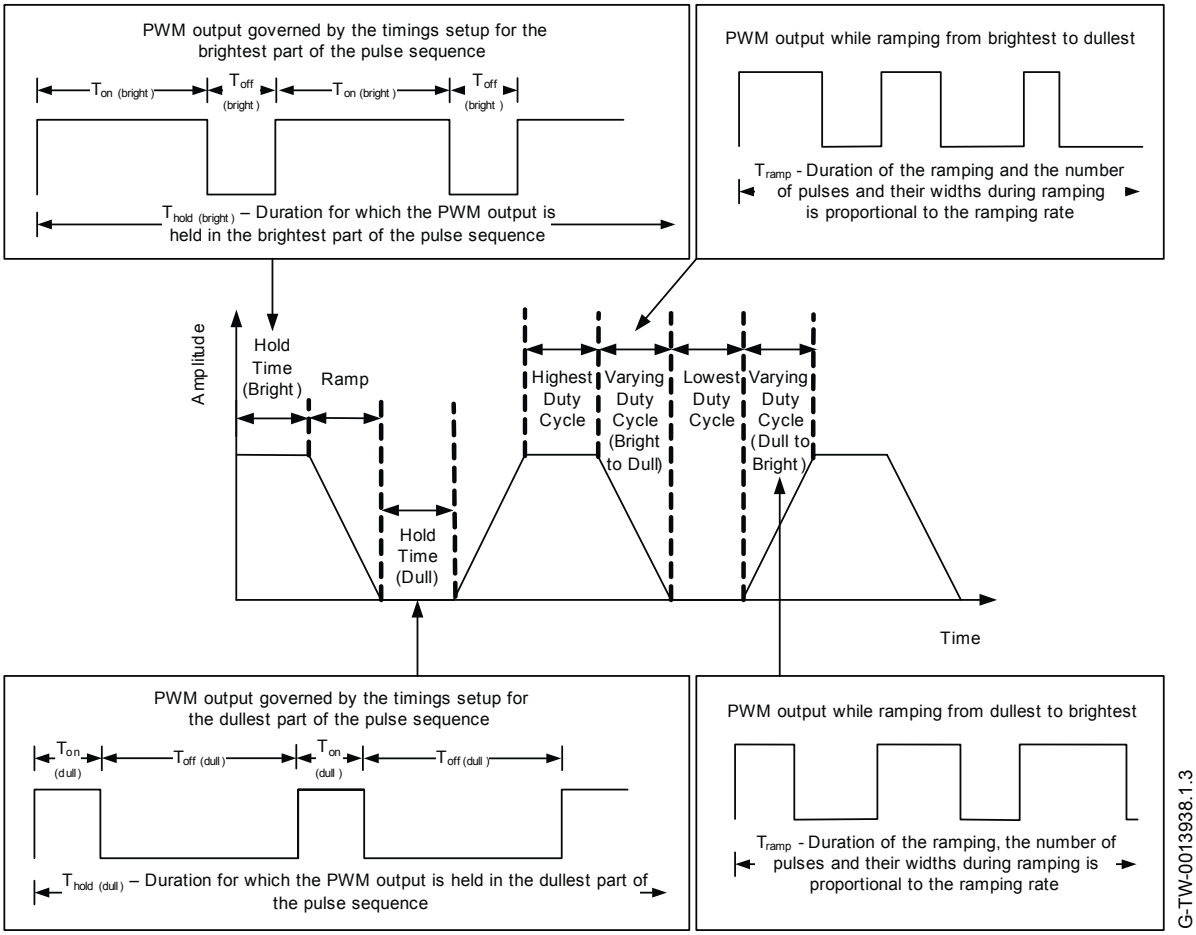

Figure 5.2: Typical PWM Signal on a PIO

Figure 5.2 lists PWM the operating range.

Parameter	Min	Max	Unit
Off Time (T_{off})	30.5	7782	µs
On Time (T_{on})	30.5	7782	µs
Hold Time (T_{hold})	16	4080	ms
Duty Cycle = On Time (T_{on}) + Off Time (T_{off})	61	15564	µs
Frequency = 1 / Duty Cycle	64.3	16320	Hz

Table 5.3: PWM Operating Range

5.6 Temperature Sensor

CSR1010D QFN contains a temperature sensor that measures the temperature of the die to an accuracy of ±1 °C.

© Cambridge Silicon Radio Limited 2014-2015
Confidential Information - This Material is Subject to CSR's Non-Disclosure Agreement

5.7 Battery Monitor

CSR1010D QFN contains an internal battery monitor that reports the battery voltage to the software.

© Cambridge Silicon Radio Limited 2014-2015

Confidential Information - This Material is Subject to CSR's Non-Disclosure Agreement

6 Serial Interfaces

6.1 Application Interface

6.1.1 UART Interface

The CSR1010D QFN UART interface provides a simple mechanism for communicating with other serial devices using the RS232 protocol.

2 signals implement the UART function, UART_TX and UART_RX. When CSR1010D QFN is connected to another digital device, UART_RX and UART_TX transfer data between the 2 devices.

UART configuration parameters, e.g. baud rate and data format, are set using CSR1010D QFN firmware.

When selected in firmware PIO[0] is assigned to a UART_TX output and PIO[1] is assigned to a UART_RX input, see Section 1.2.

Note:

To communicate with the UART at its maximum data rate using a standard PC, the PC requires an accelerated serial port adapter card.

Table 6.1 shows the possible UART settings for the CSR1010D QFN.

Parameter		Possible Values
Baud rate	Minimum	2400 baud (≤2%Error)
		9600 baud (≤2%Error)
	Maximum	3.69Mbaud (≤0.1%Error)
Parity		None, Odd or Even
Number of stop bits		1 or 2
Bits per byte		8

Table 6.1: Possible UART Settings

6.1.1.1 UART Configuration While in Deep Sleep

The maximum baud rate is 2400 baud during deep sleep.

6.2 I²C Interface

The I²C interface communicates to EEPROM, external peripherals or sensors. An external EEPROM connection can hold the program code externally to the CSR1010D QFN.

Figure 6.1 shows an example of an EEPROM connected to the I²C interface where I2C_SCL, I2C_SDA and PIO[2] are connected to the external EEPROM. The PIO[2] pin supplies the power to the EEPROM supply pin, e.g. VDD. At boot-up, if there is no valid ROM image in the CSR1010D QFN ROM area the CSR1010D QFN tries to boot from the I²C interface, see Figure 6.5. This involves reading the code from the external EEPROM and loading it into the internal CSR1010D QFN RAM.

© Cambridge Silicon Radio Limited 2014-2015
Confidential Information - This Material is Subject to CSR's Non-Disclosure Agreement

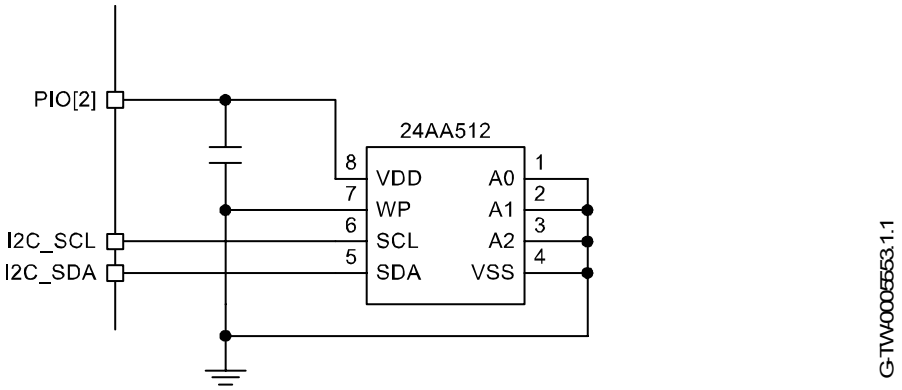

Figure 6.1: Example of an I²C Interface EEPROM Connection

Standard Mode 100 kHz

Figure 6.2 shows I²C standard mode 100 kHz timing diagram.

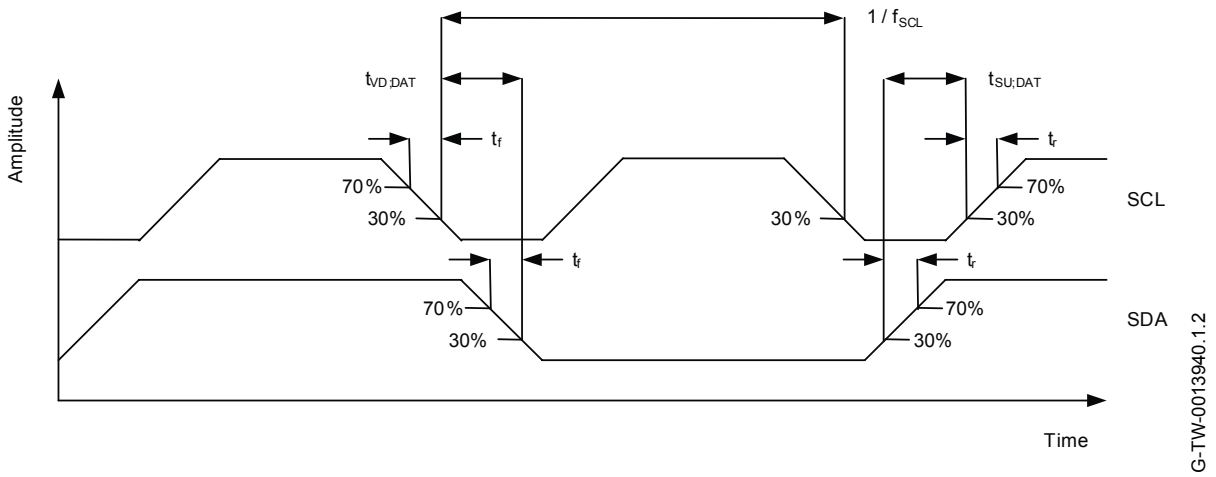

Figure 6.2: I²C Standard Mode 100 kHz Timing Diagram (Top Line: SCL, Bottom Line: SDA)

Table 6.2 lists I²C standard mode 100 kHz timing definition.

Parameter	Symbol	Min	Max	Unit
Clock Rate	f_{SCL}	-	100	kHz
SCL: Rise-time (30% to 70%)	t_r	-	50.3	ns
SCL: Fall-time (70% to 30%)	t_f	-	0.9	ns
SDA: Rise-time (30% to 70%)	t_r	-	55.3	ns
SDA: Fall-time (70% to 30%)	t_f	-	0.7	ns
Data set-up time	$t_{SU;DAT}$	2511	-	ns
Data valid time	$t_{VD;DAT}$	-	2.5	µs

Table 6.2: I²C Standard Mode 100 kHz Timing Definition

© Cambridge Silicon Radio Limited 2014-2015
Confidential Information - This Material is Subject to CSR's Non-Disclosure Agreement

Fast Mode 400 kHz

Figure 6.3 shows I²C fast mode 400 kHz timing diagram.

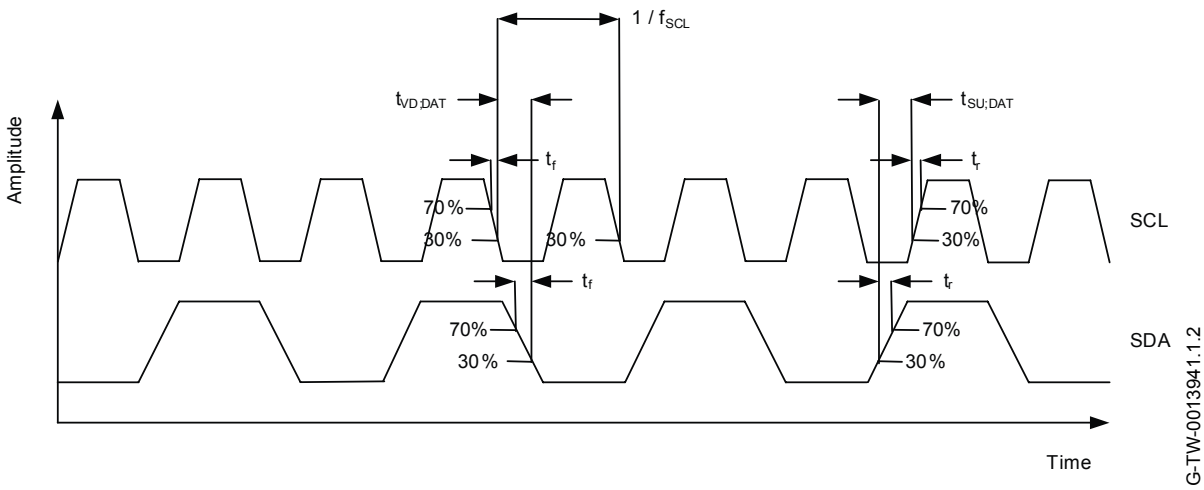

Figure 6.3: I²C Fast Mode 400 kHz Timing Diagram (Top Line: SCL, Bottom Line: SDA)

Table 6.3 lists I²C fast mode 400 kHz timing definition.

Parameter	Symbol	Min	Max	Unit
Clock Rate	f_{SCL}	-	400	kHz
SCL: Rise-time (30% to 70%)	t_r	41.4	50.6	ns
SCL: Fall-time (70% to 30%)	t_f	0.7	0.9	ns
SDA: Rise-time (30% to 70%)	t_r	46.0	55.9	ns
SDA: Fall-time (70% to 30%)	t_f	0.5	0.7	ns
Data set-up time	$t_{SU;DAT}$	573	-	ns
Data valid time	$t_{VD;DAT}$	-	0.56	µs

Table 6.3: I²C Fast Mode 400 kHz Timing Definition

6.3 SPI Master Interface

The SPI master memory interface in the CSR1010D QFN is overlaid on the I²C interface and uses a further 3 PIOs for the extra pins, see Table 6.4.

© Cambridge Silicon Radio Limited 2014-2015
Confidential Information - This Material is Subject to CSR's Non-Disclosure Agreement

SPI Flash Interface	Pin
Flash_VDD	PIO[2]
SF_DIN	PIO[3]
SF_CS#	PIO[4]
SF_CLK	I2C_SCL
SF_DOUT	I2C_SDA

Table 6.4: SPI Master Serial Flash Memory Interface

Note:

If an application using CSR1010D QFN is designed to boot from SPI serial flash, it is possible for the firmware to map the I²C interface to alternative PIOs.

Figure 6.4 shows simple SPI timing diagram.

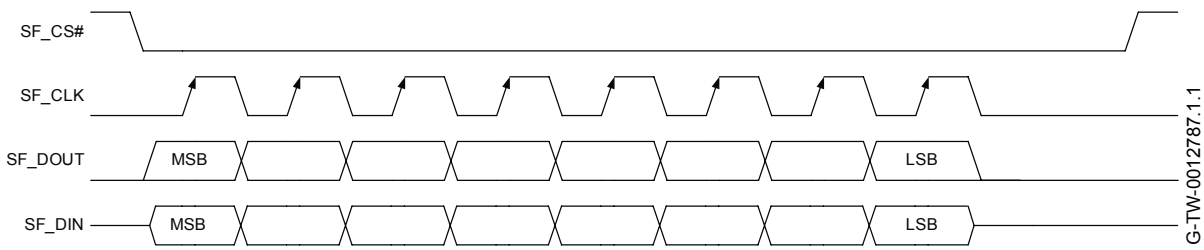

Figure 6.4: SPI Timing Diagram

The boot-up sequence for CSR1010D QFN is controlled by hardware and firmware. Figure 6.5 shows the sequence of loading RAM with content from RAM, EEPROM and SPI serial flash.

© Cambridge Silicon Radio Limited 2014-2015
Confidential Information - This Material is Subject to CSR's Non-Disclosure Agreement

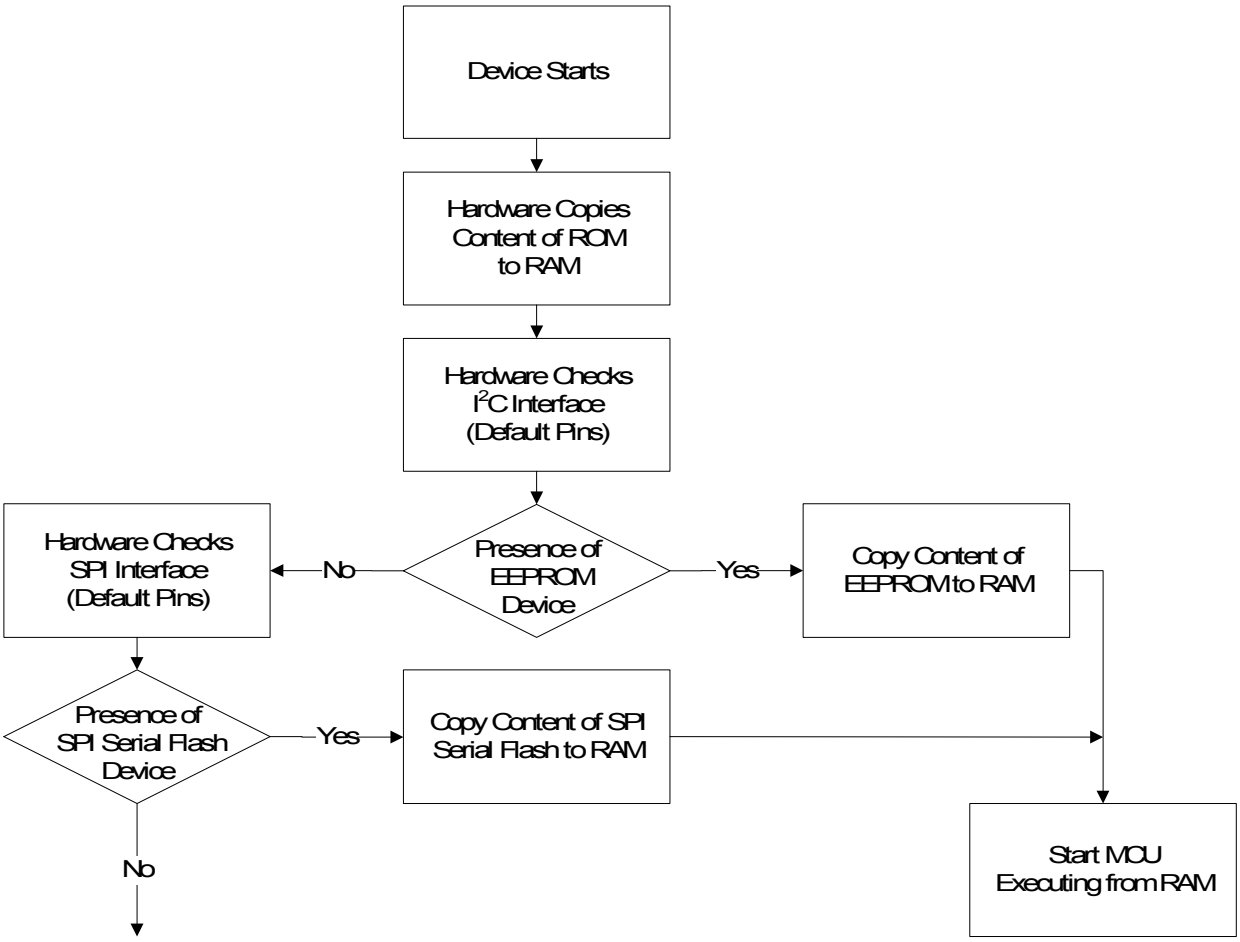

Figure 6.5: Memory Boot-up Sequence

6.4 Programming and Debug Interface

Important Note:

The CSR1010D QFN debug SPI interface is available in SPI slave mode to enable an external MCU to program and control the CSR1010D QFN, generally via libraries or tools supplied by CSR. The protocol of this interface is proprietary. The 4 SPI debug lines directly support this function.

The SPI programs, configures and debugs the CSR1010D QFN. It is required in production. Ensure the 4 SPI signals are brought out to either test points or a header.

Take SPI_PIO#_SEL high to enable the SPI debug feature on PIO[8:5].

CSR1010D QFN uses a 16-bit data and 16-bit address programming and debug interface. Transactions occur when the internal processor is running or is stopped.

Data is written or read one word at a time. Alternatively, the auto-increment feature is available for block access.

6.4.1 Instruction Cycle

The CSR1010D QFN is the slave and receives commands on DEBUG_MOSI and outputs data on DEBUG_MISO. Table 6.5 shows the instruction cycle for a SPI transaction.

© Cambridge Silicon Radio Limited 2014-2015
Confidential Information - This Material is Subject to CSR's Non-Disclosure Agreement

1	Reset the SPI interface	Hold DEBUG_CS# high for 2 DEBUG_CLK cycles
2	Write the command word	Take DEBUG_CS# low and clock in the 8-bit command
3	Write the address	Clock in the 16-bit address word
4	Write or read data words	Clock in or out 16-bit data word(s)
5	Termination	Take DEBUG_CS# high

Table 6.5: Instruction Cycle for a SPI Transaction

With the exception of reset, DEBUG_CS# must be held low during the transaction. Data on DEBUG_MOSI is clocked into the CSR1010D QFN on the rising edge of the clock line DEBUG_CLK. When reading, CSR1010D QFN replies to the master on DEBUG_MISO with the data changing on the falling edge of the DEBUG_CLK. The master provides the clock on DEBUG_CLK. The transaction is terminated by taking DEBUG_CS# high.

The auto increment operation on the CSR1010D QFN cuts down on the overhead of sending a command word and the address of a register for each read or write, especially when large amounts of data are to be transferred. The auto increment offers increased data transfer efficiency on the CSR1010D QFN. To invoke auto increment, DEBUG_CS# is kept low, which auto increments the address, while providing an extra 16 clock cycles for each extra word written or read.

6.4.2 Multi-slave Operation

Do not connect the CSR1010D QFN in a multi-slave arrangement by simple parallel connection of slave MISO lines. When CSR1010D QFN is deselected (DEBUG_CS# = 1), the DEBUG_MISO line does not float. Instead, CSR1010D QFN outputs `0` if the processor is running or `1` if it is stopped.

© Cambridge Silicon Radio Limited 2014-2015
Confidential Information - This Material is Subject to CSR's Non-Disclosure Agreement

7 Power Control and Regulation

CSR1010D QFN contains 2 regulators:

- 1 switch-mode regulator, which generates the main supply rail from the battery
- 1 low-voltage linear regulator

Figure 7.1 shows the configuration for the power control and regulation with the CSR1010D QFN.

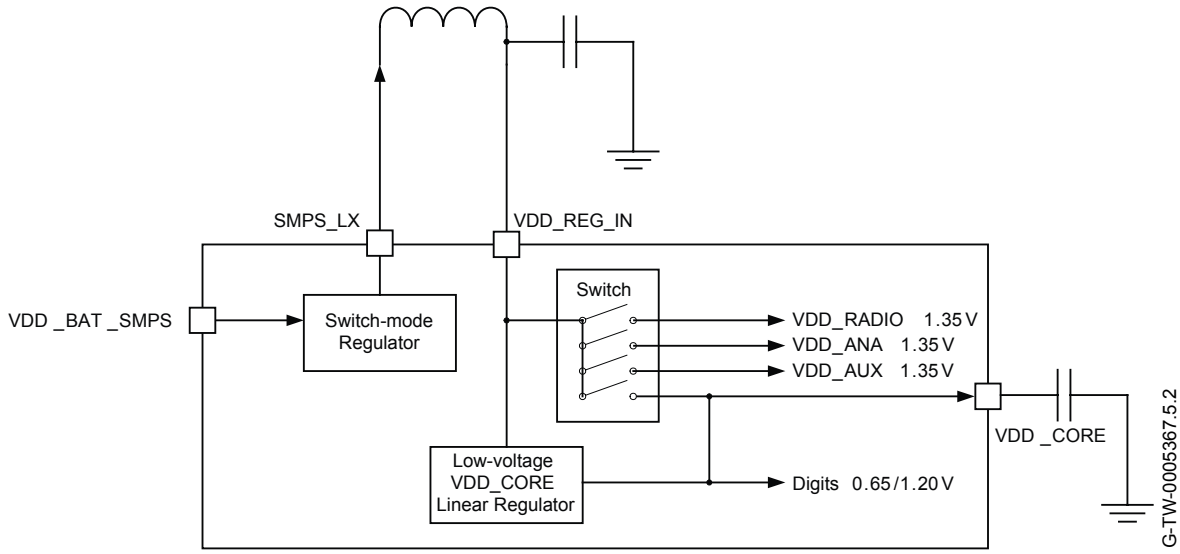

Figure 7.1: Voltage Regulator Configuration

7.1 Switch-mode Regulator

The switch-mode regulator generates the main rail from the battery supply, VDD_BAT_SMPS. The main rail supplies the lower regulated voltage to a further digital linear regulator and also to the analogue sections of the CSR1010D QFN.

The switch-mode regulator generates typically 1.35V.

7.2 Low-voltage VDD_CORE Linear Regulator

The integrated low-voltage VDD_CORE linear regulator powers the CSR1010D QFN digital circuits. The input voltage range is 0.65V to 1.35V. It can supply programmable voltages of 0.65V to 1.20V to the digital area of the CSR1010D QFN. The maximum output current for this regulator is 30mA.

Connect a minimum 470nF low ESR capacitor, e.g. MLC, to the VDD_CORE output pin. Software controls the output voltage.

Important Note:

This regulator is only for CSR internal use. Section 8 shows CSR's recommended circuit connection.

7.3 Reset

CSR1010D QFN is reset by:

- Power-on reset
- Software-configured watchdog timer

7.3.1 Digital Pin States on Reset

Table 7.1 shows the pin states of CSR1010D QFN on reset. PU and PD default to weak values unless specified otherwise.

© Cambridge Silicon Radio Limited 2014-2015
Confidential Information - This Material is Subject to CSR's Non-Disclosure Agreement

Pin Name / Group	On Reset
I2C_SDA	Strong PU
I2C_SCL	Strong PU
PIO[11:0]	Weak PD
AIO[2:0]	Weak PU

Table 7.1: Pin States on Reset

7.3.2 Power-on Reset

Table 7.2 shows how the power-on reset occurs.

Power-on Reset	Typ	Unit
Reset release on VDD_CORE rising	1.05	V
Reset assert on VDD_CORE falling	1.00	
Reset assert on VDD_CORE falling (Sleep mode)	0.60	
Hysteresis	50	mV

Table 7.2: Power-on Reset

© Cambridge Silicon Radio Limited 2014-2015
Confidential Information - This Material is Subject to CSR's Non-Disclosure Agreement

8 Example Application Schematic

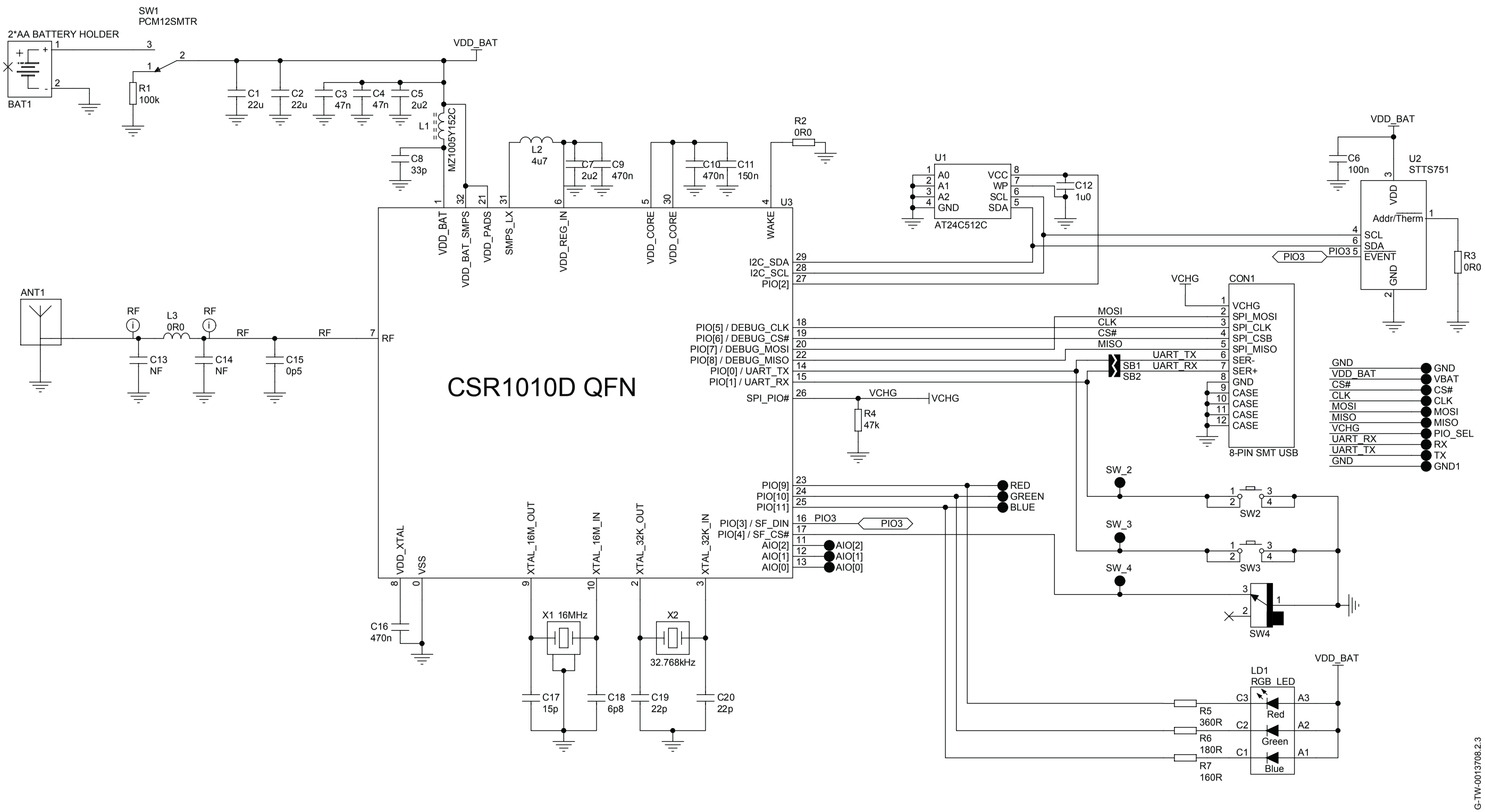

© Cambridge Silicon Radio Limited 2014-2015
Confidential Information - This Material is Subject to CSR's Non-Disclosure Agreement

9 Electrical Characteristics

Note:

Electrical characteristics measurements made at 20°C and at 3.3V VBAT.

9.1 Absolute Maximum Ratings

Rating	Min	Max	Unit
Storage temperature	-30	105	°C
Battery (VDD_BAT) operation	1.8	3.6	V
I/O supply voltage	-0.4	3.6	V
Other terminal voltages[(a)]	VSS - 0.4	VDD + 0.4	V

[(a)] VDD = Terminal Supply Domain

9.2 Recommended Operating Conditions

Operating Condition	Min	Typ	Max	Unit
Operating temperature range[(a)]	-30	-	105	°C
Battery (VDD_BAT) operation	1.8	-	3.6	V
I/O supply voltage (VDD_PADS)	1.2	-	3.6	V

[(a)] In ambient conditions where Θ-ja = 10, Θ-jb = 1, Θ-jc = 12 (ºC/W).

Note:

For information on product reliability at recommended operating conditions, see Section 11.

© Cambridge Silicon Radio Limited 2014-2015
Confidential Information - This Material is Subject to CSR's Non-Disclosure Agreement

9.3 Input/Output Terminal Characteristics

9.3.1 Switch-mode Regulator

Switch-mode Regulator	Min	Typ	Max	Unit
Input voltage	1.8	-	3.6	V
Output voltage[(a)]	-	1.35	-	V
Temperature coefficient	-200	-	200	ppm/°C
Normal Operation				
Output noise, frequency range 100Hz to 100kHz	-	-	0.4	mV rms
Settling time, settling to within 10% of final value	-	-	30	µs
Output current (I_{max})	-	-	50	mA
Quiescent current (excluding load, I_{load} < 1mA)	-	-	20	µA
Ultra Low-power Mode				
Output current (I_{max})	-	-	100	µA
Quiescent current	-	-	1	µA

[(a)] During Run mode, see Section 4.1.

9.3.2 Low-voltage Linear Regulator

Normal Operation	Min	Typ	Max	Unit
Input voltage	0.65	-	1.35	V
Output voltage	0.65	-	1.20	V

Important Note:

This regulator is only for CSR internal use. Section 8 shows CSR's recommended circuit connection.

9.3.3 Digital Terminals

Input Voltage Levels	Min	Typ	Max	Unit
V_{IL} input logic level low	-0.4	-	0.3 x VDD_PADS	V
V_{IH} input logic level high	0.7 x VDD_PADS	-	VDD_PADS + 0.4	V
T_r/T_f	-	-	25	ns

© Cambridge Silicon Radio Limited 2014-2015
Confidential Information - This Material is Subject to CSR's Non-Disclosure Agreement

Output Voltage Levels	Min	Typ	Max	Unit
V_{OL} output logic level low, I_{OL} = 4.0mA	-	-	0.4	V
V_{OH} output logic level high, I_{OH} = -4.0mA	0.75 x VDD_PADS	-	-	V
T_r/T_f	-	-	5	ns

Input, Output and Tristate Currents[a]	Min	Typ	Max	Unit
I_{OL} output current low, V_{OL} max	-	8	10	mA
I_{OH} output current high, V_{OH} min	-	8	10	mA
With strong pull-up	-150	-40	-10	µA
I²C with strong pull-up	-250	-	-	µA
With strong pull-down	10	40	150	µA
With weak pull-up	-5.0	-1.0	-0.33	µA
With weak pull-down	0.33	1.0	5.0	µA
C_I input capacitance	1.0	-	5.0	pF

[a] Maximum current draw from VDD_PADS is less than 30mA depending on board design.

9.3.4 AIO

Input/Output Voltage Levels	Min	Typ	Max	Unit
Input voltage	0	-	VDD_AUX	V
Output voltage	0	-	VDD_AUX	V
Output drive strength	-	4	-	mA

9.3.4.1 Auxiliary ADC

Auxiliary ADC		Min	Typ	Max	Unit
Resolution		-	-	10	Bits
Input voltage range[a]		0	-	VDD_AUX	V
Accuracy	INL	-3	-	3	LSB
	DNL	-3	-	3	LSB

© Cambridge Silicon Radio Limited 2014-2015
Confidential Information - This Material is Subject to CSR's Non-Disclosure Agreement

Auxiliary ADC	Min	Typ	Max	Unit
Offset	-1	-	1	LSB
Gain error	-0.8	-	0.8	%
Input bandwidth	-	100	-	kHz
Conversion time (measured at application)	-	46	-	µs
Sample rate[(b)]	-	-	21000	Samples/s
ADC block conversion current	-	410	-	µA

[(a)] LSB size = VDD_AUX/1023

[(b)] The auxiliary ADC is accessed through the firmware API. The sample rate given is achieved as part of this function.

9.3.4.2 Auxiliary DAC

Auxiliary DAC	Min	Typ	Max	Unit
Resolution	-	-	10	Bits
Supply voltage, VDD_ANA	1.30	1.35	1.40	V
Output voltage range	0	-	VDD_AUX	V
Full-scale output voltage	1.30	1.35	1.40	V
LSB size	0	1.32	2.64	mV
Offset	-1.32	0	1.32	mV
Integral non-linearity	-3	0	3	LSB
Settling time	-	-	250	ns

Important Note:

Access to the auxiliary DAC is firmware-dependent, for more information about its availability contact CSR.

© Cambridge Silicon Radio Limited 2014-2015
Confidential Information - This Material is Subject to CSR's Non-Disclosure Agreement

9.4 Junction Temperature

Table 9.1 lists the junction temperature when the device is operating within recommended operating conditions.

Parameter	Min	Typ	Max	Unit
Junction temperature	-	-	125	°C

Table 9.1: Junction Temperature within Recommended Operating Conditions

9.5 ESD Protection

Apply ESD static handling precautions during manufacturing.

Table 9.2 lists the ESD handling maximum ratings.

Condition	Class	Max Rating
Human Body Model Contact Discharge per AEC Q100-002	H1C	2000V (all pins)
Charged Device Model Contact Discharge per AEC Q100-011	C4B	750V (all pins)

Table 9.2: ESD Handling Ratings

© Cambridge Silicon Radio Limited 2014-2015
Confidential Information - This Material is Subject to CSR's Non-Disclosure Agreement

10 Current Consumption

Table 10.1 shows CSR1010D QFN total typical current consumption measured at the battery.

Mode	Description	Total Typical Current at 3.0V
Dormant	All functions are shut down. To wake them up, toggle the WAKE pin.	<900nA
Hibernate	VDD_PADS = OFF, REFCLK = OFF, SLEEPCLK = ON, VDD_BAT = ON	<1.9µA
Deep sleep	VDD_PADS = ON, REFCLK = OFF, SLEEPCLK = ON, VDD_BAT = ON, RAM = ON, digital circuits = ON, SMPS = ON (low-power mode), 2.2ms wake-up time	<5µA
Idle	VDD_PADS = ON, REFCLK = ON, SLEEPCLK = ON, VDD_BAT = ON, RAM = ON, digital circuits = ON, MCU = IDLE, <1µs wake-up time	~1mA
RX active	-	~20mA @ 3.0V peak current
TX active	-	~18mA @ 3.0V peak current

Table 10.1: Current Consumption

Note:

Current consumption measurements were made:

- At 20°C and with 3.0V VBAT.
- For the whole chip: including radio, microcontroller and necessary peripherals.
- Using SDK 2.4.3.

© Cambridge Silicon Radio Limited 2014-2015
Confidential Information - This Material is Subject to CSR's Non-Disclosure Agreement

11 Product Reliability Tests

At 85 °C CSR1010D QFN is guaranteed to:

- 15000 hours with light on, or
- 10 year lifetime with a 4 hrs in 24 hrs duty cycle

11.1 Die Test

Test	Test Conditions	Specification
High Temperature Operating Life	125°C, VDD_{max}, 2000 hours	JEDEC JESD22-A108

© Cambridge Silicon Radio Limited 2014-2015
Confidential Information - This Material is Subject to CSR's Non-Disclosure Agreement

12 CSR Green Semiconductor Products and RoHS Compliance

CSR confirms that CSR Green semiconductor products comply with the following regulatory requirements:

- Restriction of Hazardous Substances directive guidelines in the EU RoHS Directive 2011/65/EU[1].
- EU REACH, Regulation (EC) No 1907/2006[1]:
  - List of substances subject to authorisation (Annex XIV)
  - Restrictions on the manufacture, placing on the market and use of certain dangerous substances, preparations and articles (Annex XVII). This Annex now includes requirements that were contained within EU Directive, 76/769/EEC. There are many substance restrictions within this Annex, including, but not limited to, the control of use of Perfluorooctane sulfonates (PFOS).
  - When requested by customers, notification of substances identified on the Candidate List as Substances of Very High Concern (SVHC)[1].
- POP regulation (EC) No 850/2004[1]
- EU Packaging and Packaging Waste, Directive 94/62/EC[1]
- Montreal Protocol on substances that deplete the ozone layer.
- Conflict minerals, Section 1502, Dodd-Frank Wall Street Reform and Consumer Protection act, which affects columbite-tantalite (coltan / tantalum), cassiterite (tin), gold, wolframite (tungsten) or their derivatives. CSR is a fabless semiconductor company: all manufacturing is performed by key suppliers. CSR have mandated that the suppliers shall not use materials that are sourced from "conflict zone mines" but understand that this requires accurate data from the EICC programme. CSR shall provide a complete EICC / GeSI template upon request.
- *Global Automotive Declarable Substance List (GADSL)*

CSR has defined the "CSR Green" standard based on current regulatory and customer requirements including free from bromine, chlorine and antimony trioxide.

Products and shipment packaging are marked and labelled with applicable environmental marking symbols in accordance with relevant regulatory requirements.

This identifies the main environmental compliance regulatory restrictions CSR specify. For more information on the full "CSR Green" standard, contact product.compliance@csr.com.

[1] Including applicable amendments to EU law which are published in the EU Official Journal, or SVHC Candidate List updates published by the European Chemicals Agency (ECHA).

© Cambridge Silicon Radio Limited 2014-2015
Confidential Information - This Material is Subject to CSR's Non-Disclosure Agreement

13 CSR1010D QFN Software Stack

CSR1010D QFN is supplied with Bluetooth v4.1 specification compliant stack firmware. Figure 13.1 shows that the CSR1010D QFN software architecture enables the Bluetooth processing and the application program to run on the internal RISC MCU.

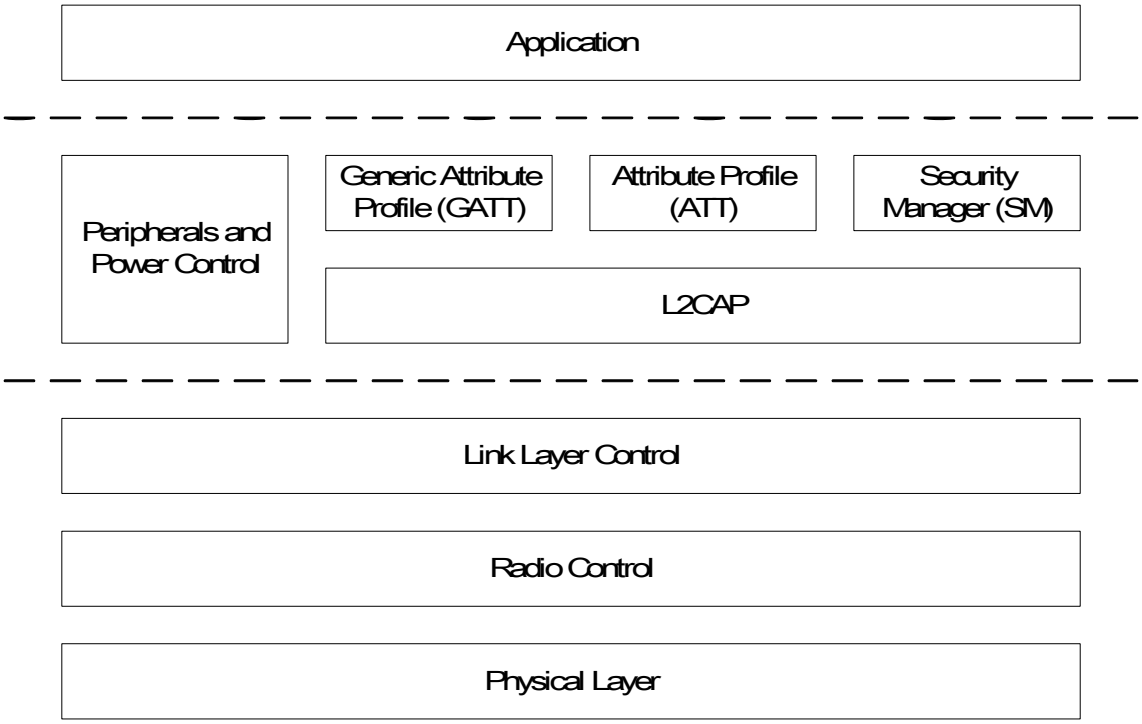

Figure 13.1: Software Architecture

© Cambridge Silicon Radio Limited 2014-2015
Confidential Information - This Material is Subject to CSR's Non-Disclosure Agreement

14 Tape and Reel Information

For tape and reel packing and labelling see *IC Packing and Labelling Specification*.

14.1 Tape Orientation

Figure 14.1 shows the CSR1010D QFN packing tape orientation.

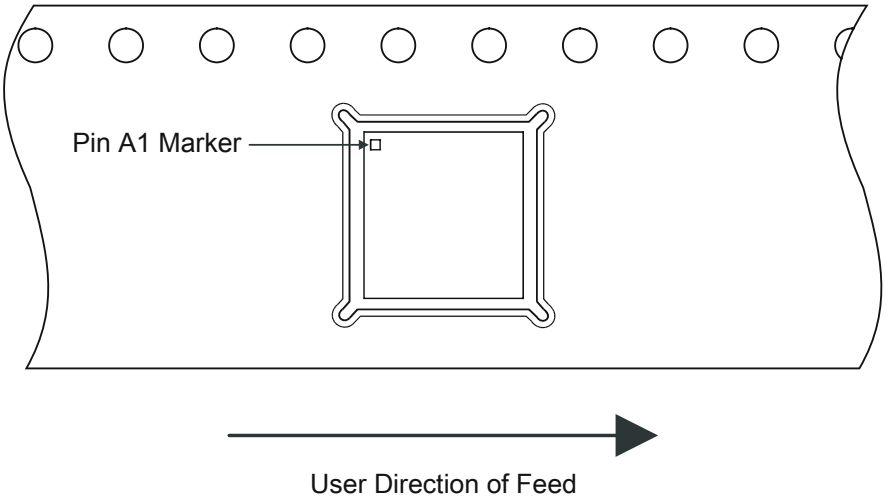

G-TW-0013430.1.2

Figure 14.1: Tape Orientation

© Cambridge Silicon Radio Limited 2014-2015
Confidential Information - This Material is Subject to CSR's Non-Disclosure Agreement

14.2 Tape Dimensions

Figure 14.2 shows the dimensions of the tape for the CSR1010D QFN.

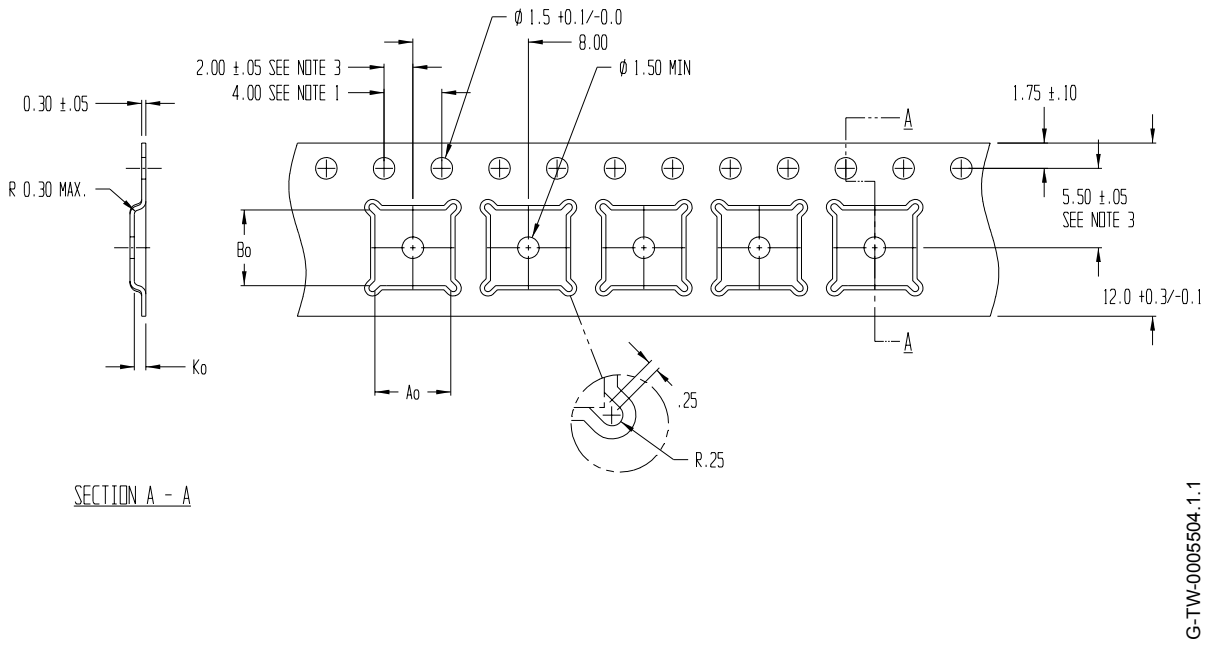

Figure 14.2: Tape Dimensions

A_0	B_0	K_0	Unit	Notes
5.25	5.25	0.80	mm	1. 10 sprocket hole pitch cumulative tolerance ±0.2. 2. Camber in compliance with EIA 481. 3. Pocket position relative to sprocket hole measured as true position of pocket, not pocket hole. 4. A_0 and B_0 are calculated on a plane at a distance "R" above the bottom of the pocket.

© Cambridge Silicon Radio Limited 2014-2015
Confidential Information - This Material is Subject to CSR's Non-Disclosure Agreement

14.3 Reel Information

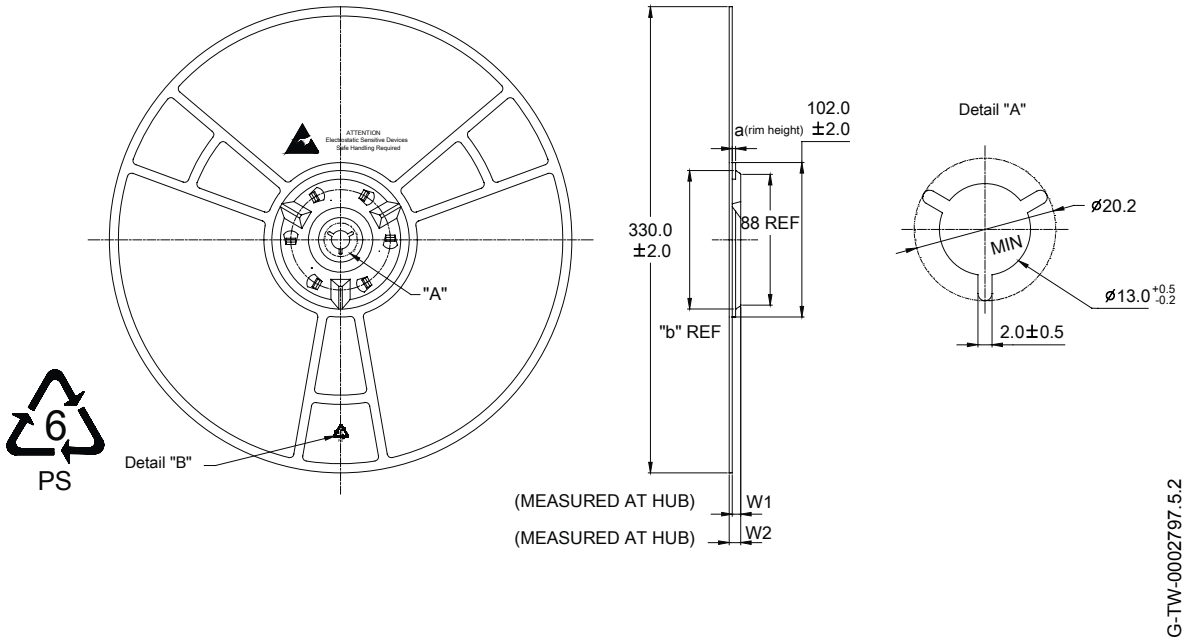

Figure 14.3: Reel Dimensions

Package Type	Nominal Hub Width (Tape Width)	a	b	W1	W2 Max	Units
5 x 5 x 0.6mm QFN	12	4.5	98.0	12.4 (2.0/-0.0)	18.4	mm

14.4 Moisture Sensitivity Level

CSR1010D QFN is qualified to moisture sensitivity level MSL3 in accordance with JEDEC J-STD-020.

© Cambridge Silicon Radio Limited 2014-2015
Confidential Information - This Material is Subject to CSR's Non-Disclosure Agreement

15 Document References

Document	Reference, Date
Core Specification of the Bluetooth System.	Bluetooth Specification Version 4.1, 03 December 2013
CSR1010 Hardware Design Review Template.	CS-218270-DD
CSR1010 QFN A05 Performance Specification.	CS-233372-SP
CSR1010 QFN 4.3V Operation Performance Specification.	CS-305811-SP
Environmental Compliance Statement for CSR Green Semiconductor Products.	CB-001036-ST
Global Automotive Declarable Substance List (GADSL)	GADSL Version 1.0, 2013
IC Packing and Labelling Specification.	CS-112584-SP
Stress Qualification for Integrated Circuits (base document only with no test methods) *Charged Device Model (CDM) Electrostatic Discharge Test* *Human Body Model (HBM) Electrostatic Discharge Test*	AEC-Q100 AEC-Q100-011 AEC-Q100-002
Temperature, Bias, and Operating Life	JEDEC JESD22-A108
Typical Solder Reflow Profile for Lead-free Devices.	CS-116434-AN

© Cambridge Silicon Radio Limited 2014-2015
Confidential Information - This Material is Subject to CSR's Non-Disclosure Agreement

Terms and Definitions

Term	Definition
AC	Alternating Current
ADC	Analogue to Digital Converter
AGC	Automatic Gain Control
AIO	Analogue Input/Output
ATT	ATTribute protocol
balun	balanced/unbalanced interface or device that changes a balanced output to an unbalanced input or vice versa
Bluetooth®	Set of technologies providing audio and data transfer over short-range radio connections
CSR	Cambridge Silicon Radio
dBm	Decibels relative to 1 mW
DC	Direct Current
DNL	Differential Non Linearity (ADC accuracy parameter)
e.g.	*exempli gratia*, for example
EDR	Enhanced Data Rate
EEPROM	Electrically Erasable Programmable Read Only Memory
ESD	Electrostatic Discharge
ESR	Equivalent Series Resistance
GAP	Generic Access Profile
GATT	Generic ATTribute protocol
GSM	Global System for Mobile communications
HID	Human Interface Device
I²C	Inter-Integrated Circuit Interface
I/O	Input/Output
IC	Integrated Circuit
IF	Intermediate Frequency
INL	Integral Non-Linearity (ADC accuracy parameter)
IPC	See www.ipc.org
IQ	In-Phase and Quadrature
JEDEC	Joint Electron Device Engineering Council (now the JEDEC Solid State Technology Association)
KB	Kilobyte
L2CAP	Logical Link Control and Adaptation Protocol
LC	An inductor (L) and capacitor (C) network

© Cambridge Silicon Radio Limited 2014-2015
Confidential Information - This Material is Subject to CSR's Non-Disclosure Agreement

Term	Definition
LED	Light-Emitting Diode
LNA	Low Noise Amplifier
LSB	Least Significant Bit (or Byte)
MAC	Medium Access Control
MCU	MicroController Unit
MISO	Master In Slave Out
MLC	MultiLayer Ceramic
MOSI	Master Out Slave In
NSMD	Non-Solder Mask Defined
PA	Power Amplifier
PC	Personal Computer
PCB	Printed Circuit Board
PD	Pull-Down
PIO	Parallel Input/Output
PIO	Programmable Input/Output, also known as general purpose I/O
plc	public limited company
ppm	parts per million
PU	Pull-Up
PWM	Pulse Width Modulation
QFN	Quad-Flat No-lead
RAM	Random Access Memory
RF	Radio Frequency
RISC	Reduced Instruction Set Computer
RoHS	Restriction of Hazardous Substances in Electrical and Electronic Equipment Directive (2002/95/EC)
ROM	Read Only Memory
RSSI	Received Signal Strength Indication
RX	Receive or Receiver
SIG	(Bluetooth) Special Interest Group
SMP	Security Manager Protocol
SMPS	Switch-Mode Power Supply

© Cambridge Silicon Radio Limited 2014-2015
Confidential Information - This Material is Subject to CSR's Non-Disclosure Agreement

Term	Definition
SPI	Serial Peripheral Interface
TCXO	Temperature Compensated crystal Oscillator
TX	Transmit or Transmitter
UART	Universal Asynchronous Receiver Transmitter
VCO	Voltage Controlled Oscillator
W-CDMA	Wideband Code Division Multiple Access

© Cambridge Silicon Radio Limited 2014-2015
Confidential Information - This Material is Subject to CSR's Non-Disclosure Agreement